Ductile Iron Ball Valve - Flanged PN16 - EN331 Gas Approved

ISO 5211 for Direct Mount, Flanged PN16, Ductile Iron 2 Piece Body,
Stainless Steel Ball & Stem, PTFE Seats, 1” to 6” Lever Operated, 8” to 12” Gearbox Operated.
DIN 3202 F4 Face to Face 1” to 6” F5 8” to 12”



Pressure / Temperature Specifications	
Pressure	PN16
Temperature	-20°C to 60°C

Material Specifications	
1. Body	EN GJS 400 Ductile Iron
2. Ball	AISI 304 Stainless Steel
3. Stem	AISI 420 Stainless Steel
4. Ball Seats	PTFE
5. O-ring	Viton
6. Handle	S235JR Forged Aluminium
7. Nut	A105 Carbon Steel

Pressure / Temperature Chart

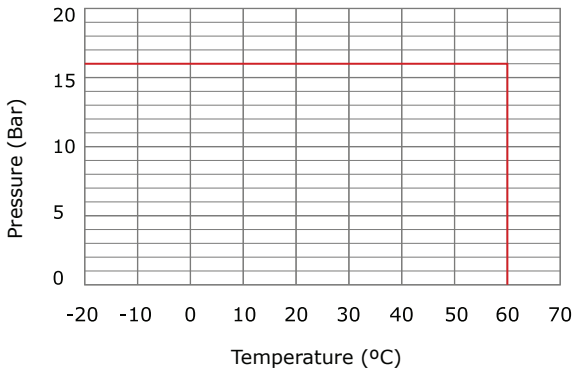

Torque Figures (Nm)

Size	Max Torque without Safety	Recommended Actuator Torque
1”	15	30
1¼”	20	45
1½”	25	60
2”	35	80
2½”	45	120
3”	60	150
4”	90	200
5”	180	450
6”	250	700
8”	400	1,000
10”	500	1,200
12”	600	1,200

Ductile Iron Ball Valve - Flanged PN16 - EN331 Gas Approved

DN25-DN50

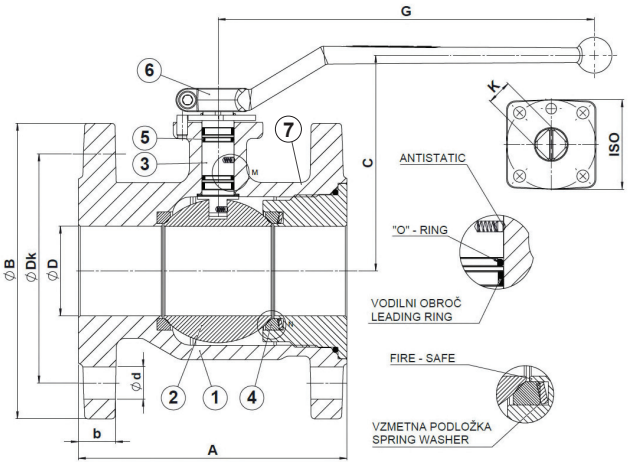

DN65-DN100

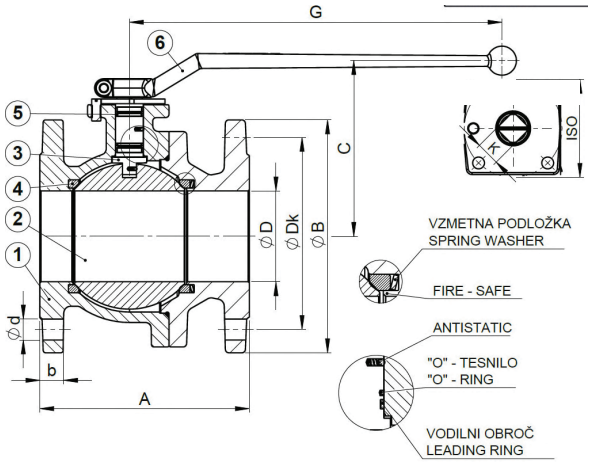

DN125-DN150

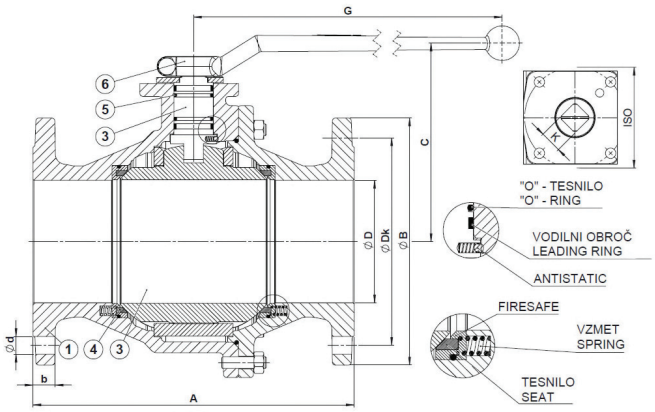

DN200-DN300

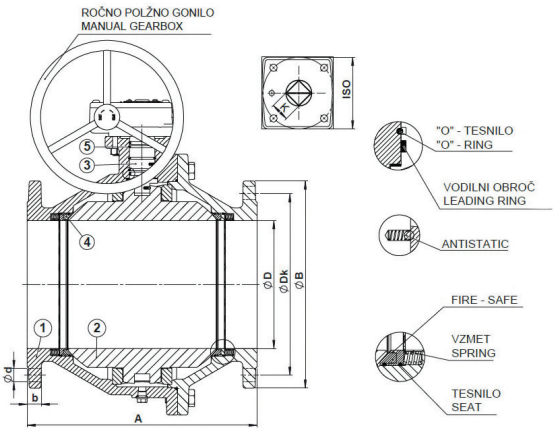

Dimensions												
DN	**A**	**ØB**	**C**	**ØD**	**G**	**b**	**ØDk**	**Ød**	**Nr**	**ISO**	**K x h**	**Kg**
1″	125	115	83	25	150	18	85	14	4	F04	11x13.5	3.6
1¼″	130	140	102	32	210	18	100	18	4	F04	14x18	5.4
1½″	140	150	107	40	210	18	110	18	4	F05	14x18	6.7
2″	150	165	120.5	50	210	20	125	18	4	F05	14x18	8.9
2½″	170	185	140	63.5	320	18	145	18	4	F07	17x23	14.7
3″	180	200	151	78	320	20	160	18	8	F07	17x23	20.1
4″	190	220	166	99	320	20	180	18	8	F07	17x23	26.0
5″	325	250	201	124	500	22	210	18	8	F10	22x27	50.0
6″	350	285	218	149	500	22	240	22	8	F10	22x27	69.5
8″	400	340	-	200	-	24	295	22	12	F12	27x30	144.0
10″	450	405	-	250	-	26	355	26	12	F14	36x36	235.0
12″	500	460	-	300	-	29	410	26	12	F14/16	36x34	329.0