# Forged Steel Globe Valve

Designed to API 602, 13% CR + HFS No. 8 Trim, Tested to API 598



| Pressure / Temperature Specifications | |
|---|---|
| Pressure | ASME Class 800 |
| Temperature | -29ºC to 538ºC |

| Pressure / Temperature Table | |
|---|---|
| Temperature (ºC) | Pressure (Bar) |
| -29 to 38 | 136.2 |
| 50 | 133.7 |
| 100 | 124.3 |
| 150 | 120.2 |
| 200 | 116.8 |
| 250 | 106.2 |
| 325 | 103.2 |
| 350 | 100.2 |
| 375 | 97.0 |
| 400 | 92.6 |
| 425 | 76.7 |
| 450 | 61.3 |
| 475 | 46.5 |
| 500 | 31.4 |
| 538 | 15.7 |

| Material Specifications | |
|---|---|
| 1. Body | ASTM A105 Forged Carbon Steel +13CR |
| 2. Bonnet | ASTM A105 Forged Carbon Steel |
| 3. Disc | ASTM A182 Forged Stainless Steel |
| 4. Gasket | Spiral Wound Stainless Steel + Graphite |
| 5. Bolt | A193 B7 Steel |
| 6. Stem | ASTM A182 Forged Stainless Steel |
| 7. Stem Packing | Braided Graphite |
| 8. Gland Eyebolt Pin | A29 1035 Carbon Steel |
| 9. Bolt | A193 B7 Steel |
| 10. Packing Bush | 13Cr |
| 11. Gland Flange | ASTM A105 Forged Carbon Steel |
| 12. Washer | A29 1035 Carbon Steel |
| 13. Nut | A194 2H Carbon Steel |
| 14. Stem Nut | A276 410 Stainless Steel |
| 15. Handwheel | Ductile Iron |
| 16. Washer | A29 1035 Carbon Steel |
| 17. Handwheel Lock Nut | A29 1035 Carbon Steel |

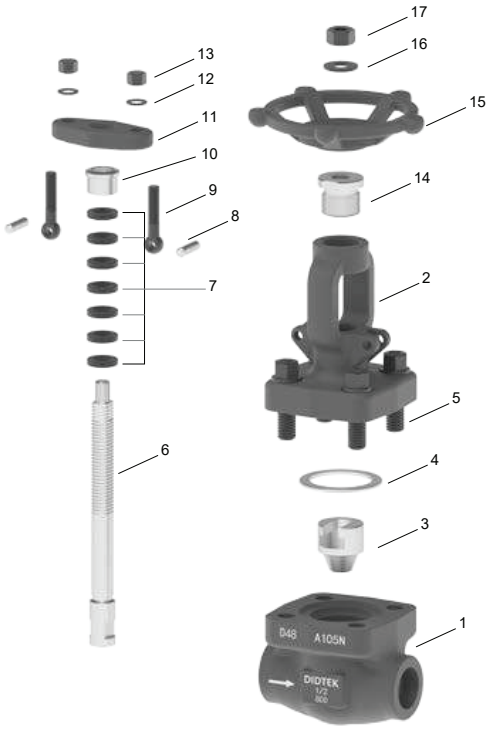

# Forged Steel Globe Valve

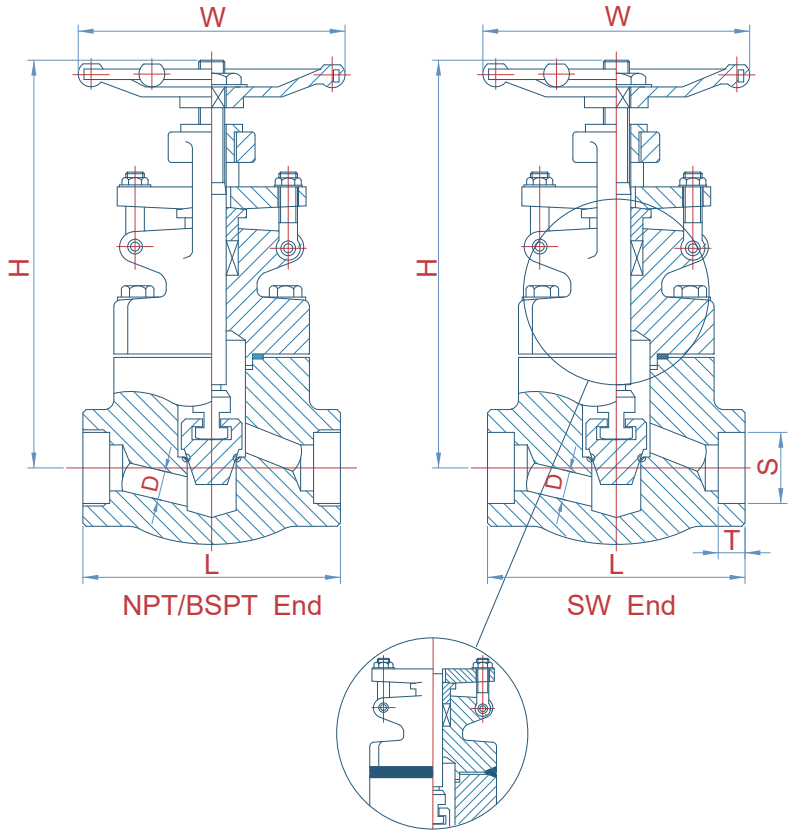


| Dimensions | | | | | | | |
|---|---|---|---|---|---|---|---|
| DN | L | D | S | T | H | W | Kg |
| ½″ | 79 | 10.5 | 21.8 | 10 | 164 | 100 | 2.28 |
| ¾″ | 92 | 13.5 | 27.2 | 13 | 164 | 100 | 2.37 |
| 1″ | 111 | 17.5 | 33.9 | 13 | 203 | 125 | 4.3 |
| 1½″ | 152 | 27 | 48.8 | 13 | 260 | 160 | 7.8 |
| 2″ | 172 | 33 | 61.2 | 16 | 300 | 180 | 12.5 |